Soit les spécifications du robot M-410iB/700 tel que montré dans les 3 dernières pages. Trouvez :

- Étendue maximale du robot :
- La capacité de chargement :
- Les vitesses des différents axes :

- Le nombre de degré de liberté de ce robot :

- La répétabilité :

- Ce robot peut-il faire une rotation de 360 sur la base ?

- Ce robot vous semble-t-il plus précis que celui du laboratoire ?
(Le robot du laboratoire a une répétabilité de +-0.05 mm)

M-410*i*B™ Series

FANUC Robotics

Basic Description

The M-410*i*B series is FANUC Robotics' latest-generation palletizing industrial robot. The unit is engineered for precision high-speed/high-payload operation, user-friendly setup, and maximum reliability supported by our extensive service and parts network. The M-410*i*B is a four-axis, electric servo-driven robot with an integrated mechanical and control unit designed for a wide variety of manufacturing and palletizing system processes.

M-410*i*B, the Solution for:

- Case palletizing
- Bag palletizing
- Depalletizing
- Layer handling
- Press tending
- Machine load/unload
- Part transfer

Benefits

- Fastest cycle times and highest payload in robot class.
- 20 cycles/min. case palletizing at 100 kg.
- 27 cycles/min. bag palletizing at 100 kg.
- Large allowable wrist inertias meet a variety of heavy handling challenges.
- High performance motion yields fast cycle times and high throughput.
- Small footprint and integrated controller reduces required floor space.
- Ability to service multiple production lines with large working envelope.
- Unique hollow RV speed reducers simplify cable routing.
- Proven, reliable FANUC servo drives provide highest uptime and productivity.
- Able to operate in environments ranging from harsh to traditional factory floor.

Features

Mechanical

- 4 axes of motion
- M-410*i*B/160: 160 kg payload capacity
- M-410*i*B/300: 300 kg payload capacity
- M-410*i*B/450: 450 kg payload capacity
- M-410*i*B/700: 700 kg payload capacity
- Dedicated pneumatic and electrical connections on J4 wrist to simplify user's end-of-arm tooling design, integration and communications (eight digital inputs/outputs, one 10 mm internal air line*, connection for 2D camera**).
- Adjustable J1 hard stops.
- Repeatability of ± 0.5 mm at full speed and full payload within entire work envelope.
- Direct-coupled drives on all axes result in higher reliability and reduced maintenance costs.
- Vertical articulation eliminates "elbow" interference issues related to SCARA robots.

*M-410*i*B/700 has two 10 mm air lines and **no connection for a camera

Controller

- Quick change amplifier <5 min.
- Fast boot time <30 sec.
- Standard Ethernet port.
- PCMCIA software distribution.
- Easy connections to a variety of I/O, including a number of distributed I/O networks.

Software

- Supports industry leading PalletTool®/PalletPRO™ software packages (palletizing setup, simulation and operation software).
- Supports Collision Guard™ by servo control to minimize damage to the robot, gripper, cases/bags and peripherals.
- Web-based software tools for remote connectivity, diagnostics and production monitoring.
- Machine vision for robot guidance (e.g. vision guided depalletizing) and inspection.
- *i*Pendant™, a color, Internet-ready teach pendant for even easier programming and custom cell user interface design.

Options

- Remote mount controller option with various robot connection cable lengths for flexible cabinet placement and optional track rated cables.
- Integrated auxiliary axes packages.
- Servo hand package utilizing standard six-channel robot servo amp.
- Fan cooling for J1, J2 and J3 motors in high-duty applications.
- *i*Pendant is also available with touch screen support.
- Monochrome pendant available.
- FANUC's *i*RVision® system delivers high performance 2-D and 3-D machine vision capabilities with FANUC reliability. Additional option for Error Proofing can provide integrated vision based capabilities to check for product completeness before product is packaged or further operations are performed.

*i*RVision® is a registered trademark of FANUC LTD.

M-410*i*B/160/300 Dimensions

Isometric

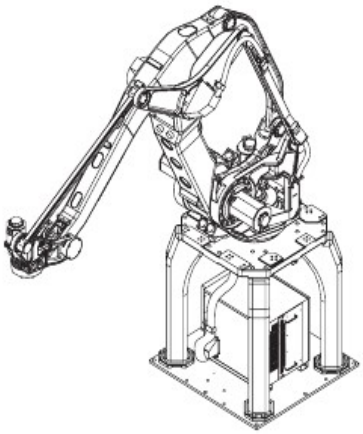

Top

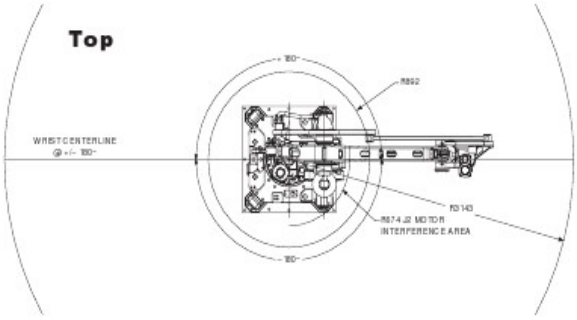

Wrist

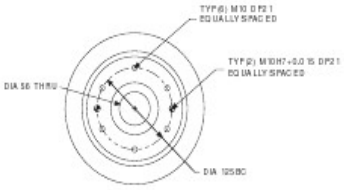

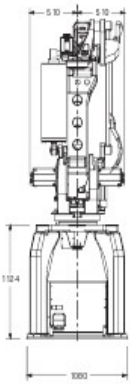

Front

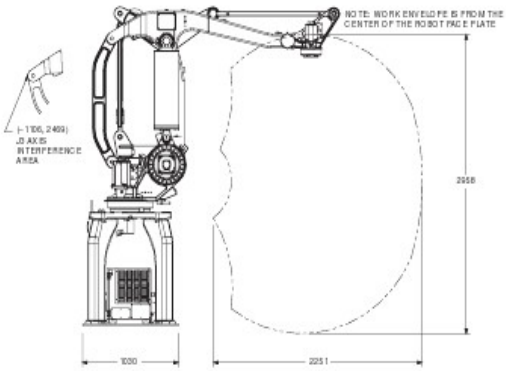

Side

M-410*i*B/450 Dimensions

Isometric

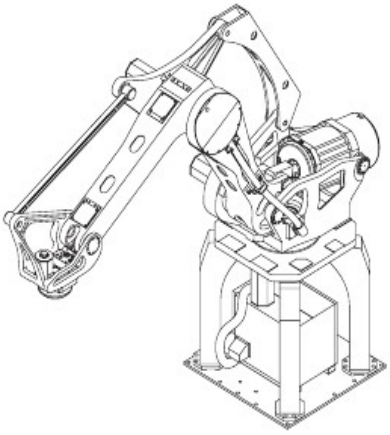

Top

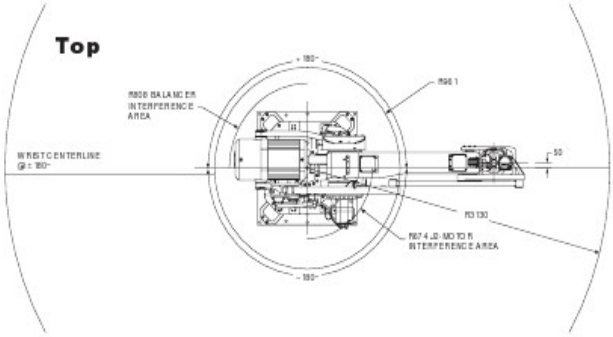

Wrist

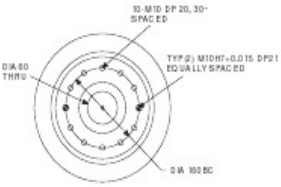

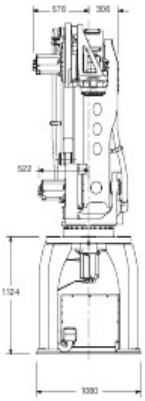

Front

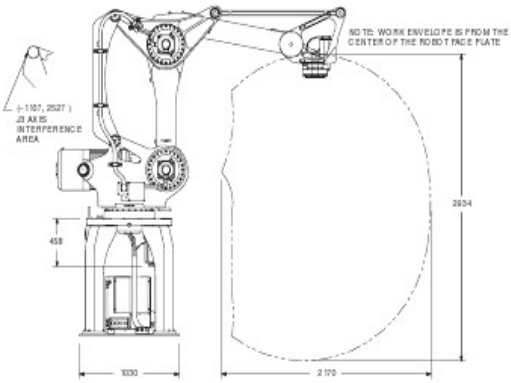

Side

M-410*i*B/700 Dimensions

Isometric

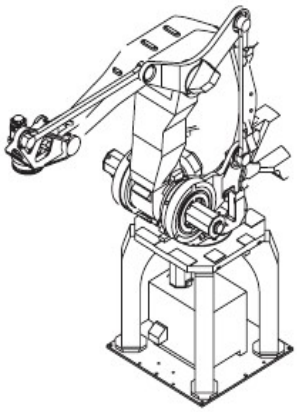

Top

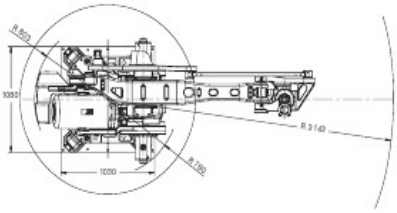

Wrist

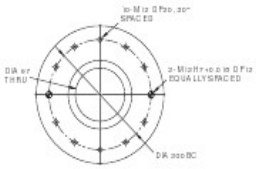

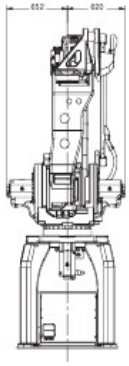

Front

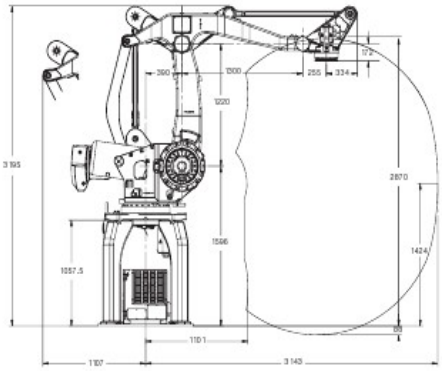

Side

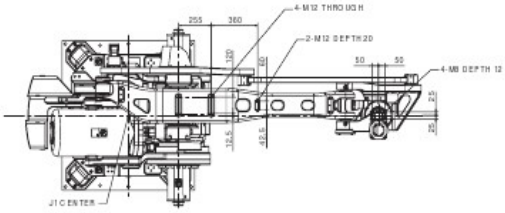

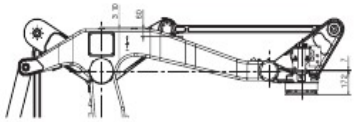

M-410*i*B/160/300/450/700 Footprint

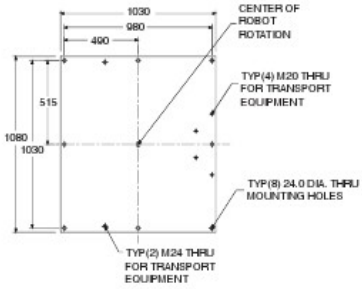

Note: Demisions are shown in millimeters.
Detailed CAD data are available upon request.

Corrugated Case Palletizing

Over 2,000 M-410*i* units installed in a variety of palletizing and part handling applications.

Layer Palletizing

Mixed Load Palletizing

M-410*i*B Series Specifications

Items		M-410*i*B/160	M-410*i*B/300	M-410*i*B/450	M-410*i*B/700
Axes		4	4	4	4
Payload (kg)		160	300	450	700
Reach (mm)		3143	3143	3130	3143
Repeatability (mm)		± 0.5	± 0.5	± 0.5	± 0.5
Interference radius (mm)		674	674	808	803
Motion range (degrees)	J1	360	360	360	360
	J2	144	144	145	144
	J3	136	136	135	136
	J4	540	540	540	540
Motion speed[1] (degrees/s)	J1	130	95	70	60
	J2	130	90	70	60
	J3	135	100	70	60
	J4	300	190	180	120
Wrist inertia (kg-m^2)	J4	78.5	137	196	540
Mechanical brakes		All axes	All axes	All axes	All axes
Mechanical weight (kg)[2]		1940	1940	2430	2700
Mounting method		Floor (upright)	Floor (upright)	Floor (upright)	Floor (upright)
Installation environment		0 to 45	0 to 45	0 to 45	0 to 45
Temperature °C					
Humidty		Normally: 75% or less Short term (within a month): 95% or less No condensation			
Vibration (m/s^2)		4.9 or less	4.9 or less	4.9 or less	4.9 or less

Notes:
(1) Maximum linear velocity for M-410*i*B Series is 2.5 m/s.
(2) Controller weight of 120 kg is included.

Intelligent Robot Solutions

FANUC Robotics

FANUC Robotics America, Inc.
3900 W. Hamlin Road
Rochester Hills, MI 48309-3253

For sales or technical information, call:
1-800-*i*Q-ROBOT

marketing@fanucrobotics.com
fanucrobotics.com

Charlotte, NC (704) 596-5121
Chicago, IL (847) 898-6000
Cincinnati, OH (513) 754-2400
Los Angeles, CA (949) 595-2700
Toledo, OH (419) 866-0788
Toronto, Canada (905) 812-2300
Montréal, Canada (450) 492-9001
Aguascalientes, Mexico 52 (449) 922-8000
Sao Paulo, Brazil (55) (11) 3619-0599

©2008 FANUC Robotics America, Inc. All rights reserved. FANUC ROBOTICS LITHO IN U.S.A. FRA-11/08